International Journal of Industrial Electronics and Electrical Engineering, ISSN(p): 2347-6982, ISSN(e): 2349-204X
Volume-6, Issue-3, Mar.-2018, http://ijieee.org.in

ARDUINO BASED DECADE COUNTER

[1]SARAH ANJUM, [2]NOORAM ANJUM

[1]Assistant Professor, Electrical Engineering Section, University Polytechnic/Aligarh Muslim University, Aligarh, India
[2]Department of Chemical Engineering, ZHCET/Aligarh Muslim University, Aligarh, India
Email: [1]sarahanjum8892@gmail.com, [2]nooramanjum1509@gmail.com

Abstract - This paper presents a 0 to 9 counter circuit constructed using ARDUINO UNO. A common anode seven segment display is connected to the microcontroller for displaying the digits. The code allows push button increment of the counter from 0 to 9. The whole circuit is powered from a standard 9V PP3/6FF22 battery. Seven segment LED displayLT542, a combination of 8 LED's (the decimal point –DP- is the 8th) is used to display the decade counter. The software used to implement the code is ARDUINO Integrated Development Environment 1.0. The code can be further multiplexed to run different symbols such as colon, apostrophe, alphabets etc.

Keywords - ARDUINO UNO, Seven segment display, multiple displays, Decimal Point, ARDUINO IDE 1.0, Display digits, LT542, Common Cathode/Anode display.

I. INTRODUCTION

The open source hardware movement has led to the stirring of art as well as design communities with the ARDUINO microcontroller. Conjectures of where designers and artists are going to find future flexible and accessible and adapt them to open source tools were summarized byLabrune, Buechly and Zambetti[1]. The ARDUINO microcontroller is used as an open source programmable tool to create interactive works in art as well as design. It can be used to drive motors, LEDs, sensors and other components. Microcontrollers are small computing systems which are used for low power and low memory purposes[1][2][4]. A microcontroller comprises of a microchip on a circuit board with read-write capabilities, memory, inputs and outputs. The ARDUINO microcontroller adheres to these capabilities and a close-up view is shown in Fig.1 and Fig.2. While microcontrollers have had the presence in the arts for decades, the ARDUINO microcontroller is one of the first microcontrollers specifically designed for artists and designers[3]. It allows artists and designers to execute electronic-incorporated works without knowing the internals of the hardware or software.

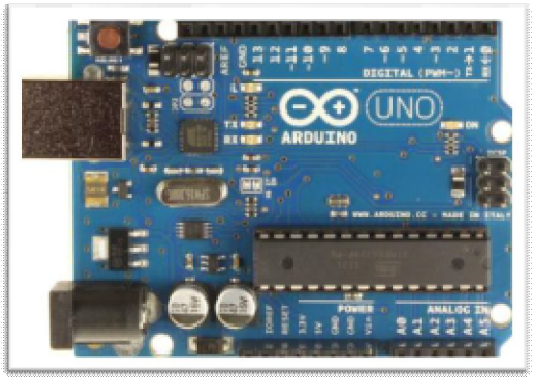

Figure1. ARDUINO UNO front view

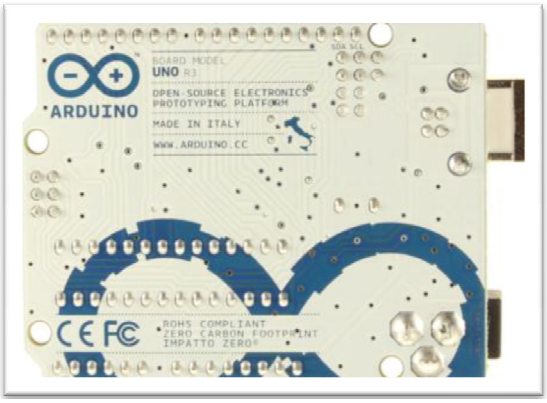

Figure2. ARDUINO UNO rear view

Seven segment displays are electronic devices which are used as a simpler method to display decimal numerals and a substitute to the more complex dot-matrix displays. Initially they grew popular as a way of displaying numbers. Nowadays they are commonly used as displays in home appliances, cars, and various other digital devices. The LT542[9] is commonly used as designs and includes seven LED bars aligned in a figure eight pattern as seen in Fig.1. It is capable of displaying the numbers 0-9 and the letters A-F by lighting the appropriate segments.

SevenSeg is an adaptable library for ARDUINO used for outputting information to seven segment displays[8]. This paper emphasizes building an ARDUINO based decade counter which can be started quickly while being flexible and cover most needs. That is, the most common seven segment displays should be connected to an ARDUINO and information of various kinds should easily yield to it. This library is envisioned for beginners as well as for moreurbane users which make it easy and equipped to be able to build application based projects. It is intended to be a tremendously lightweight library. Key functionality includes[6][7]:

1. Supports arbitrary numbers of digits and multiple displays.

2. Supports displays with decimal points, colon and apostrophe.
3. Supports common anode, common cathode and other hardware configurations.
4. High level printing functions for easy displaying.
5. Displays numbers (integers, fixed point and floating point), text strings and time (hh:mm) or (mm:ss).
6. Automatic multiplexing with adjustable refresh rate.
7. Adjustable brightness through duty cycle control.
8. Use of interrupt timers for multiplexing in order to release resources, allowing the microcontroller unit to execute other code.
9. Leading zero suppression (e.g. 123 displayed as 123 rather than 0123 when using 4 digits)
10. No shadow artifact.

The segments in every digit are marked A to G in the customary way as portrayed in Fig.3. Some displays also have an 8th segment for the decimal point (DP). In case of seven-segment displays[1], there are two categories ; Common anode and common cathode. In case of common anode,a common pin, usually the power source, is used in order to tie all the anodes, which are on the display, together to the pin, and the LED are controlled via the cathodes with ground being on and power being off. In common cathode,a common pin, generally ground, is used in order to tie all the cathodesand the LED are driven by the state of the anodes where ground is off and power is on.Therefore, a seven-segment plus decimal point package,though marketable products generally contain more pins so as to match industry standard pin-outs, will need only nine pins.

II. HARDWARE SETUP

This section contains information about how to configure the SevenSeg library to the hardware ARDUINO/GENUINO UNO which is a microcontroller board based on the ATmega328P (datasheet)[8]. It has 14 digital input/output pins (of which 6 can be used as PWM outputs), 6 analog inputs, a 16 MHz quartz crystal, a USB connection, a power jack, an ICSP header and a reset button. The setup model requires ARDUINO UNO, a 220 Ω resistor, LT542 seven segment display 10 jumper wires. Fig.6 shows the arrangement for the setup and the color coded pins of ARDUINO UNO depict the connections of LEDs to the microcontroller.

ARDUINO PIN	DISPLAY CONNECTIONS
2	7(A)
3	6(B)
4	4(C)
5	2(D)
6	1(E)
7	9(F)
8	10(G)
N/C	DECIMAL POINT

Table1. Connections of a common cathode type 7-segment LED display

III. EXPERIMENT METHOD

A 4-digit seven segment common anode display is connected to the ARDUINO UNO as per the connection shown in Table1. The library assumes a common anode display unless stated otherwise[2][5]. The segments in each digit are labeled A to G in the standard way as depicted in Fig.3. Some displays also have an 8th segment for the decimal point (DP). The schematic for a 4-digit common anode display is depicted in Fig.4. Each segment houses an LED light. All anodes (positive terminal) on a digit are tied together into one pin which is hereinafter referred to as a digit pin. The code is written in ARDUINO IDE software 1.0 in the following sequence.

1. 7-Segment display object is initialized with ARDUINO input/output pin numbers as the arguments. The segments A, B, C, D, E, F, G are to be connected to the ARDUINO input/output.
2. The display object is identified with the digit pins and their number in the form of an array.The digit pin is directly tied to the ground in case of common cathode while for common anode supply to spare 1 ARDUINO I/O pin.
3. A user defined function informs the seven segment library that the display connected is common cathode type.
4. The segment and digit pins are configured using an object Active pin state. The function has integer arguments and specifies whether the segment and digital pins should be active high/low.
5. Function DPPin is defined with an integer data type describing that digits have a decimal point (DP) and that their segments are connected to DPPin.
6. High level printing functions write are defined with integer data types that runs for a user defined multiple loop.

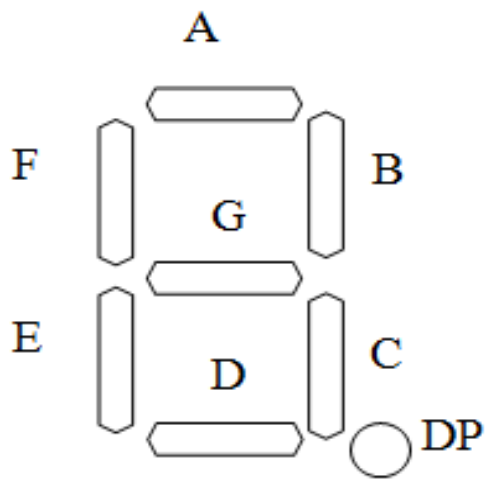

Figure3. Labeling of a 7-segment digit including a decimal point (DP)

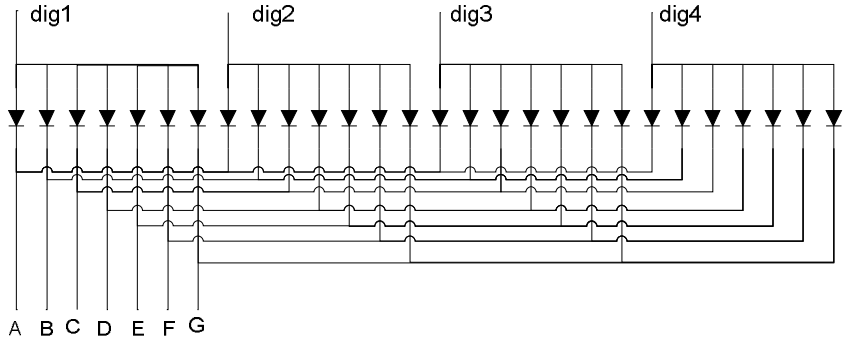

Figure4: A 4-digit common anode display

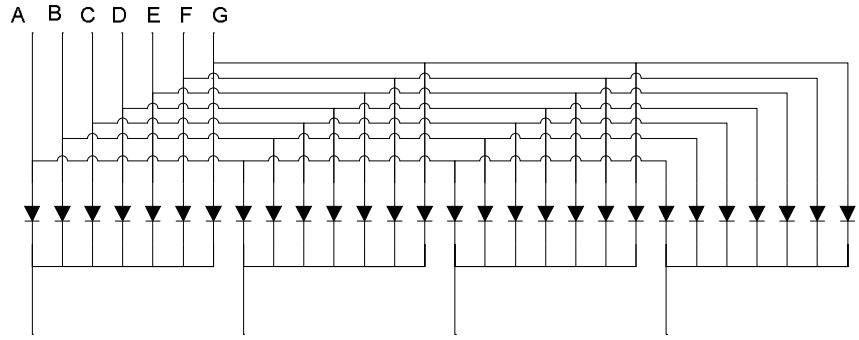

Figure5: A 4-digit common cathode display

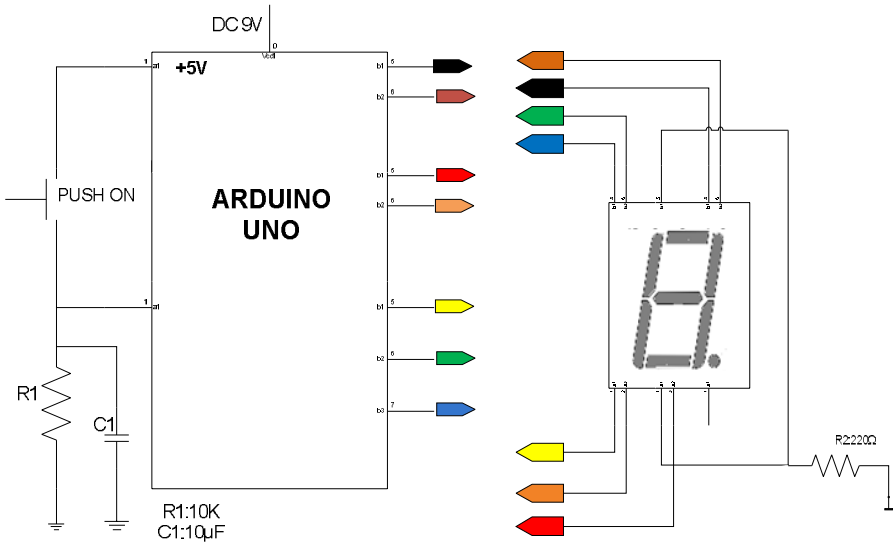

Figure6. Block diagram of connections of ARDUINO UNO with 7-segment LED display

1. A separate function for introducing delay is defined which executes for a specified multiples of clock timings.
2. The function for display digits 0 to 9 depicting the active high and low states of the segments is defined.
3. The above 2 steps are executed repeatedly for digits 0 to 9 with intermediate looping for delay.
4. The display is cleared using a user defined function to mark the end of the ARDUINO based decade counter using a 7-segment display.

RESULTS

ARDUINO based decade counter using a 7-segment LED display is devised using ARDUINO IDE software 1.0. The ARDUINO UNO can be powered via the USB connection or with an external power supply. It is designed in a way that allows it to be reset by software running on a connected computer. It provides a complete, easy-to-use and cost efficient hardware and software solution for designing

application based circuits. It started off as a cheap means of implementing physical computing and control of interactive projects building. However, now there is a great variety of different implementations based on the original board.

Seven-segment displays are very suitable to use and simple to design. The relevance of using a seven-segment display as a method of showing a mathematical output for a decade counter was deliberated here. Though the basic framework provided here should harvest other applications also. The displays are highly versatile and with proper input can display a variety of numbers, letters, and figures. If the case occurs where multiple digits are needed to be displayed, then expanding of the applications is possible provided serial inputs should be found that allow control of a set of digits from only a few inputs.

CONCLUSION

The project in this paper is easy to use and since it requires only one ARDUINO microcontroller is cost efficient as well. The biggest advantage of ARDUINO is that its library of examples is present inside the software for ARDUINO. The automatic unit conversion capability makes debugging effortless and time-saving. Moreover, the LT542 seven segment LED display is feasible and compatible for high level applications and functions as it requires very low power supply to operate. However, each segment requires a separate resistor otherwise the current per segment/brightness will vary with the number of segments involved in the display digit.

REFERENCES

[1] Gibb, A.M., 2010. New media art, design, and the Arduino microcontroller: A malleable tool. Master's Thesis.PrattUniversity.Creative Commons Attribution - NonCommercial-ShareAlike.

[2] Margolis, M., 2011. Arduino Cookbook: Recipes to Begin, Expand, and Enhance Your Projects. " O'Reilly Media, Inc.".

[3] Sarik, J., Akinwande, A.I. and Kymissis, I., 2011. A laboratory-based course in display technology. IEEE Transactions on Education, 54(2), pp.314-319.

[4] Wilcher, D., 2012. Learn electronics with Arduino. Apress.

[5] Barrett, S.F., 2013. Arduino microcontroller processing for everyone!. Synthesis Lectures on Digital Circuits and Systems, 8(4), pp.1-513.

[6] Arduino, S.A., 2015. Arduino. Obtenido de Arduino Mega: http://arduino. cc/en/Main/arduinoBoardMega.

[7] Herger, L.M. and Bodarky, M., 2015, March. Engaging students with open source technologies and Arduino. In Integrated STEM Education Conference (ISEC), 2015 IEEE(pp. 27-32). IEEE.

[8] Atmel Semiconductor Manufacturing Company, 2016. Atmel-42735-8-bit-AVR-Microcontroller-ATmega328-328P_Datasheet. [pdf](SECURED). Available at: www.atmel.com/Images/Atmel-42735-8-bit-AVR-Microcontroller-ATmega328-328P_Datasheet.pdf [Accessed 15 November 2017]

[9] Kingbright Electronic Corporation Limited, 2007. SA56-51PBWA-A. [pdf]. Available at:<http://us.kingbright.com/images/catalog/SPEC/SA56-51PBWA-A.pdf.> [Accessed 15 November 2017].

[10] Sarik, J. and Kymissis, I., 2010, October. Lab kits using the Arduino prototyping platform.In Frontiers in Education Conference (FIE), 2010 IEEE (pp. T3C-1).IEEE.

[11] Badamasi, Y.A., 2014, September. The working principle of an Arduino.In Electronics, Computer and Computation (ICECCO), 2014 11th International Conference on (pp. 1-4).IEEE.

[12] Schubert, E.F., Gessmann, T. and Kim, J.K., 2005. Light emitting diodes. John Wiley & Sons, Inc..

★★★